linea bin

Sleek and minimalist

Linea Bin 240L with brushed stainless steel 316 frames, aluminium Bush Cherry battens, Sable Core Ten signage and Rectangular opening insert.

street furniture australia

Style it your way

Tailor the Linea Bin with colour, texture and custom artwork.

Fits 120L or 240L common wheeled bins.

Classic with Colour Accent

Aluminium Bush Cherry battens, brushed stainless steel 316 frames, Viper Green opening insert.

Cool and Airy

Aluminium Wedgewood battens, Textura Deep Ocean frames, custom perforation.

Multicolour Battens

Aluminium Lycra Strip Green, Viper Green, Shamrock Green and Heritage Green battens, Textura Woodland Grey frames, custom laser etching.

Modern Monochrome

Aluminium anodised battens, Sable Brilliance frames, signage and opening insert.

Scandi Charm

Aluminium Curly Birch battens, Textura Jasper frames, Mustard Yellow signage, Textura Doe Skin opening inserts.

Version 3 © SFA 2026
Version 3 © SFA 2026

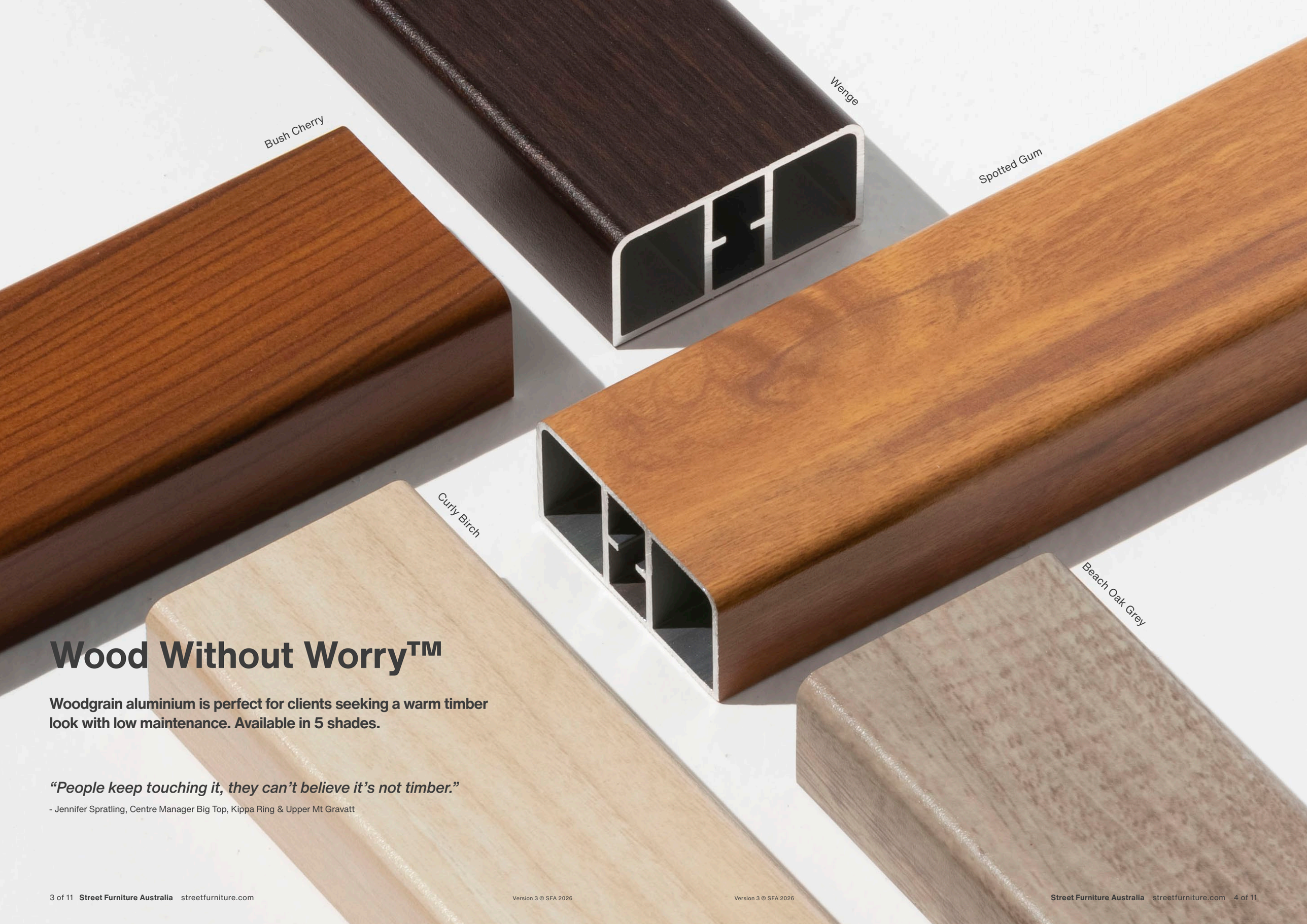

Wood Without Worry™

Woodgrain aluminium is perfect for clients seeking a warm timber look with low maintenance. Available in 5 shades.

"People keep touching it, they can't believe it's not timber."

- Jennifer Spratling, Centre Manager Big Top, Kippa Ring & Upper Mt Gravatt

Version 3 © SFA 2026
Version 3 © SFA 2026

Select your batten

Linea Bin is offered with eco-certified wood and low carbon aluminium battens in many colours and finishes.

Eco-certified Wood*

Low Carbon Aluminium**

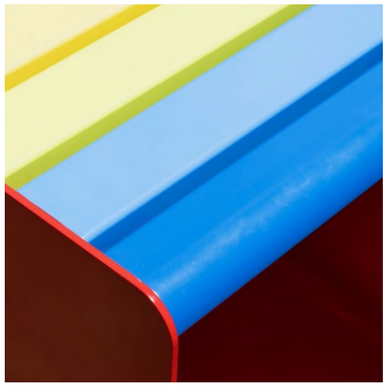

Raw *Oiled*

Oiled

Spotted Gum *Curly Birch* *Bush Cherry*

Beach Oak *Wenge*

Dusty Pink *Pale Eucalypt* *Wedgewood*

Palladium Silver *Monument*

Anodised

	WoodPlus™ (Engineered Wood) NEW *FSC Certified*	**Spotted Gum (Hardwood)** *PEFC Certified*	**Aluminium Woodgrain** *'Wood Without Worry'*	**Aluminium Powder Coated** *More colours and finishes on streetfurniture.com/colour-chart*	**Aluminium Anodised**
Low maintenance	✓ (If specified raw to silver naturally)	✗	✓	✓	✓
Colour fade-resistant	✗	✗	✓	✓ (Select UV stable colour)	✓
Recyclable	✗	✗	✓	✓	✓
Carbon neutral	✓	✓	✓	✓	✓
Price range	$	$$	$	$	$

**Oiled wood needs re-oiling every 3 months, while raw wood can be left to silver naturally. For a wood look with low maintenance, choose Aluminium Woodgrain (also known as Wood Without Worry).*

***Low-carbon Aluminium is produced using renewable energy instead of fossil fuels and is infinitely recyclable.*

Version 3 © SFA 2026

Version 3 © SFA 2026

3 Key Features

Stainless Steel Frames
Available in 316 No.4 brushed or powder coated

Accessible Signage
Text size and colour contrast meet DDA and ADA requirements.

Heavy-duty Piano Hinge
Full height and stainless steel 316.

Linea Bin, Dual Side-by-side with aluminium Curly Birch dbattens, brushed roof and side panels, Lobster Red insert and signage for General Waste and Mustart insert and signage for Recycling.

Version 3 © SFA 2026

How to order in 5 steps

For further tailoring, contact us to speak with a sales consultant.

Australia 1300 027 799
International +61 2 8774 8888
Email info@streetfurniture.com

Linea Bin is constructed from stainless steel frames, with battens in aluminium or hardwood. Stainless steel 316 is used for the splay tray and robust piano hinge for the door. This bin must be surface-fixed.

Download technical sheet

Select one per category to specify your product.

1. Select size

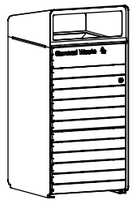

☐ **120L**
570L x 640W x 1245H mm
22 1/2" L x 25 1/4" W x 49" H

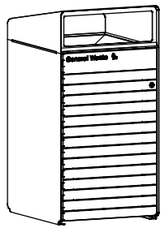

☐ **240L**
715L x 810W x 1415H mm
28 1/8" L x 31 7/8" W x 55 3/4" H

2. Select battens and colours

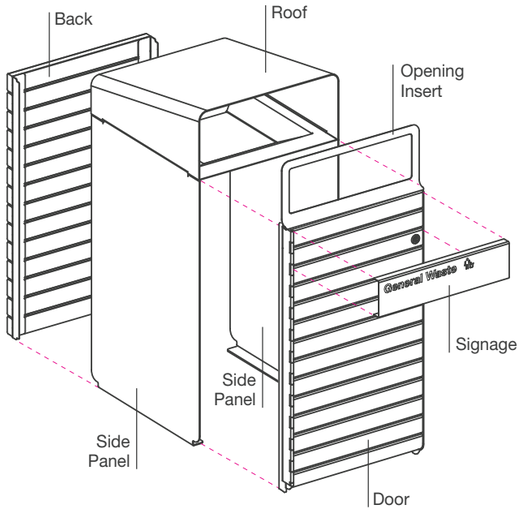

A. Battens (Door and Back)

Wood Without Worry

- Aluminium Wenge
- Aluminium Bush Cherry
- Aluminium Spotted Gum
- Aluminium Beach Oak Grey
- Aluminium Curly Birch
- Aluminium powder coated *(For the full colour chart, go to streetfurniture.com/colour-chart)*
- Aluminium anodised
- Eco-certified hardwood *(Timber requires oiling every three months)*
- Eco-certified WoodPlus™ (Engineered Wood)

3. Select signage (optional)

Text is laser-cut with a backing panel, featuring high-contrast colours for accessibility and DDA/ADA alignment.

General Waste	**Recycling**
General Waste (Lobster Red)	Recycling (Mustard)
Organics	
Organics (Viper Green)	Tailored

B. Colours (Side Panels, Roof, and Insert)

For the full colour chart, go to streetfurniture.com/colour-chart
Brushed stainless steel available in 316 only.

Colours shown are indicative only, variations may occur in printing.

4. Select opening insert

Rectangle Circle Slot

5. Door Lock

☐ Slam Lock with Triangular Key (Standard)

☐ Keyless Slam Lock

Version 3 © SFA 2026

Expanding the Linea Family

Linea Bin integrates seamlessly with the broader Linea range - including seats, benches, planters, bollards, bicycle stands and more.

Version 3 © SFA 2026
Version 3 © SFA 2026

JOIN

streetchat

Get news, trends and tips
on furnishing the public realm at
streetfurniture.com/streetchat

Australia 1300 027 799
International +61 2 8774 8888

Email info@streetfurniture.com
N6 391 Park Road, Regents Park
NSW 2143, Australia

street furniture australia

streetfurniture.com

Australian Institute of Landscape Architects
Supporting Corporate Partner

American Society of Landscape Architects
Corporate Member No.1173455