November 2026

aria bench

This is a carbon neutral product.

The Aria range is a contemporary yet highly durable solution for the public realm.

Aria products are a part of a modular furniture system. To create your own shape and size, visit build.streetfurniture.com

MCODE: CMA4

DIMENSIONS:
485W x 440H x various lengths (mm)
19 1/8" W x 17 3/8" H x various lengths

Select one box per category to specify your product.

LEGS AND MOUNTING:
☐ Splay Leg
  ☐ Surface Fixed
  ☐ Subsurface Fixed
  ☐ Freestanding
☐ Pedestal Leg
  ☐ Surface Fixed
  ☐ Subsurface Fixed
☐ Pedestal Tall Leg For Accesible Picnic Setting
  ☐ Surface Fixed
  ☐ Subsurface Fixed
☐ Plinth Bracket (Fixed on Top of Wall)

BATTEN:
Eco-certified Wood*
  ☐ WoodPlus™ (Engineered Wood, FSC)
    ☐ Raw
    ☐ Oiled
  ☐ Hardwood, Oiled (PEFC)
Low-carbon Aluminium**
  ☐ Aluminium Woodgrain See Colour Chart
  ☐ Aluminium Powder Coated See Colour Chart
    ☐ Single Colour
    ☐ Multicolour
  ☐ Aluminium Anodised

**Oiled wood needs re-oiling every 3 months, while raw wood can be left to silver naturally. For a fade-resistant, low-maintenance timber look, choose Aluminium Woodgrain (also known as Wood Without Worry™).*
***Low-carbon aluminium is produced using renewable energy instead of fossil fuels and is infinitely recyclable.*

FRAME:
☐ Cast Aluminium Powder Coated
See Colour Chart

ARM:
Dark colours are not recommended for areas in direct sunlight.
☐ None
☐ 1 Arm Left
☐ 1 Arm Right
☐ 2 Arms

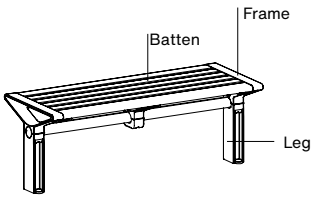

2B - 1200mm
with Pedestal Leg

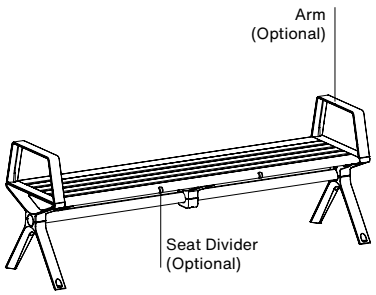

3B - 1800mm
with Splay Leg

LEG AND MOUNTING

SPLAY LEG

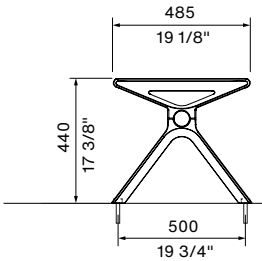

Surface Fixed

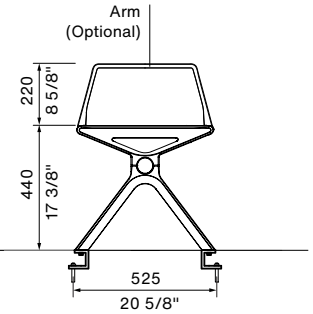

Subsurface Fixed

PEDESTAL LEG

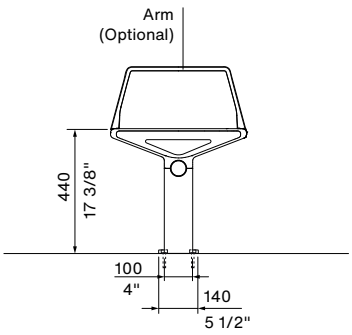

Surface Fixed

PEDESTAL TALL FOR ACCESSIBLE PICNIC SETTING

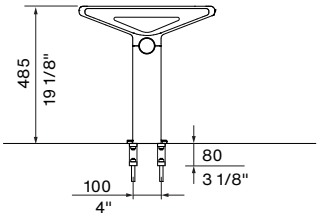

Subsurface Fixed

PLINTH BRACKET

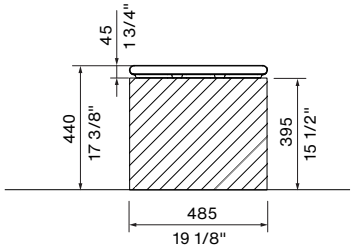

Fixed to Top of Wall

© Street Furniture Australia Pty Limited ABN 46 070 910 100

Australia 1300 027 799 **International** +61 2 8774 8888
Email info@streetfurniture.com

By THa, Checked THu

November 2026

aria bench

This is a carbon neutral product.

OPTIONAL EXTRAS:
Refer to the separate technical sheet.
☐ Seat Divider (DV5)
☐ Table Accessory (TA2)

LENGTH:
☐ 1-seater 600mm | 23 5/8"
☐ 2-seater 1200mm | 47 1/4"
☐ 3-seater 1800mm | 70 7/8"
☐ 4-seater 2100mm | 82 5/8"
☐ Tailored

Some options incur additional fees and lead time.

Need more information?
For a brochure, image gallery, CAD downloads, installation and maintenance guides, go to:
streetfurniture.com/au/product/aria-bench/

Quick links:
streetfurniture.com/au/colour-chart/
streetfurniture.com/au/warranty/

LENGTH

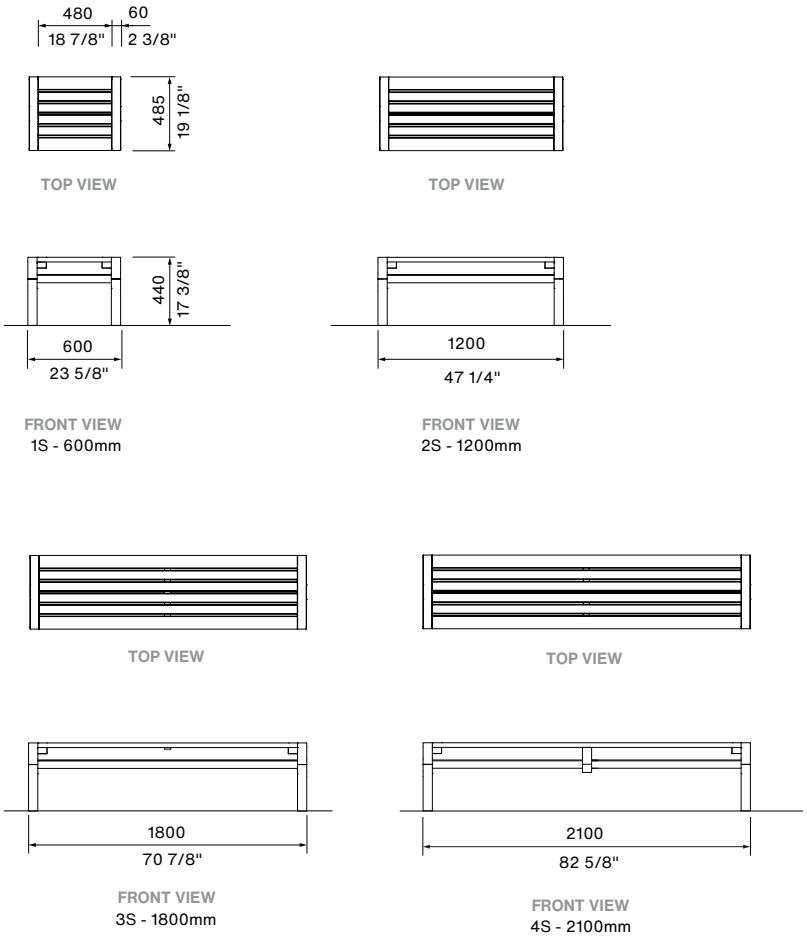

BATTEN MAP

Refer to numbers to specify multicolour battens.

